CRYSTEK CRYSTALS
A Division of Crystek Corporation

Temperature Compensated Crystal Oscillator Voltage Trim Option Available

CXOH / CXOHV Model
14 Pin DIP, **3.3V & 5.0V, HCMOS/TTL**

RoHS Compliant

Frequency Range:	1 MHz to 38 MHz
Frequency Stability:	±1ppm to ±5ppm
Frequency Stability vs Volt:	±0.5ppm Max
Frequency Stability vs Load:	±0.3ppm Max
Temperature Range:	-40°C to 85°C
Storage:	-45°C to 90°C
Input Voltage:	3.3V or 5.0V ±5%V
Mechecanical Trim Range:	±3ppm Min
(Option V)	Voltage Trim Pin 1
Input Current:	15mA Typical, 30mA Max
Output:	HCMOS/TTL
Symmetry:	40/60% Max @ 50% Vdd
(Option Y)	45/55% Max
Rise/Fall Time:	4ns Typical, 10ns Max
Output Voltage:	"0" = 10% Vdd Max
	"1" = 90% Vdd Min
Load:	15pF/10TTL Max
Phase Noise Typ.: 10 Hz	-100 dBc/Hz
100 Hz	-130 dBc/Hz
1 kHz	-140 dBc/Hz
10 kHz	-145 dBc/Hz
100 kHz	-150 dBc/Hz
Aging:	<1ppm Max per Year

Designed to meet today's requirements for tighter frequency stability tolerance while reducing unit cost.

VCTCXO Specification

Voltage Trim Pin 1:	± 5ppm Min
Control Voltage:	(5V) 2.5V ± 2.5V
	(3.3V) 1.65V ± 1.65V

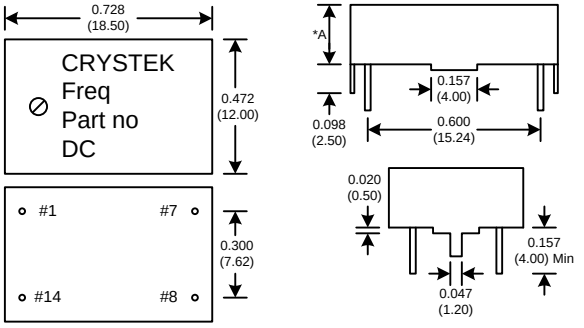

Dimensions inches (mm)
All dimensions are Max unless otherwise specified.

Suggested PCB Layout

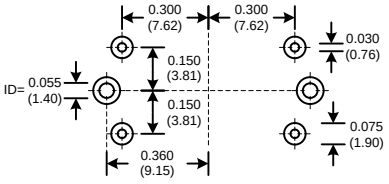

PIN	Function
1	VT or NC
7	GND
8	OUT
14	Vcc

*A .178 (4.50) / .197 (5.00)

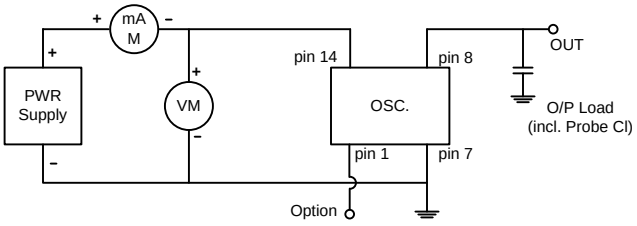

	Operating Temperature	Frequency Stability (± ppm)						
A	0°C to 50°C	1.0	1.5	2.0	2.5	3.0	4.0	5.0
B	-10°C to 60°C			2.0	2.5	3.0	4.0	5.0
C	-10°C to 70°C			2.0	2.5	3.0	4.0	5.0
D	-20°C to 70°C			2.0	2.5	3.0	4.0	5.0
E	-30°C to 60°C			2.0	2.5	3.0	4.0	5.0
F	-30°C to 70°C			2.0	2.5	3.0	4.0	5.0
G	-30°C to 75°C			2.0	2.5	3.0	4.0	5.0
H	-40°C to 85°C					3.0	4.0	5.0
		P	A	B	C	D	E	F

Table 1

Crystek Part Number Guide

CXOHV - 4 B C 3 Y - 25.000
(#1 #2 #3 #4 #5 #6 #7 #8)

#1	Crystek TCXO HCMOS/TTL
#2	V or blank = (V = Volt.Trim) (Blank = Mech. Trim)
#3	4 or blank = Height (4 = 4.5mm) (Blank = 5.0mm)
#4	Letter = Operating Temperature (see table 1)
#5	Letter = Frequency Stability (see table 1)
#6	3 or blank = Input Volt (3 = 3.3 volts) (Blank= 5V)
#7	Y or blank = Symmetry (Y=45/55) (Blank = 40/60)
#8	Frequency in MHz: 3 or 6 decimal places

Example:
CXOH-4BC3Y-25.000 = mech. trim, 4.5mm, -10/60, ±2.5ppm, 3.3V, 45/55%, 25.000MHz
CXOHV-4B3CY-25.000 = volt. trim, 4.5mm, -10/60,±2.5ppm, 3.3V, 45/55%, 25.000MHz

Specifications subject to change without notice.

TD-020811 Rev. H