1.8 ~ 3.3V CMOS Oscillator

GXO-U119

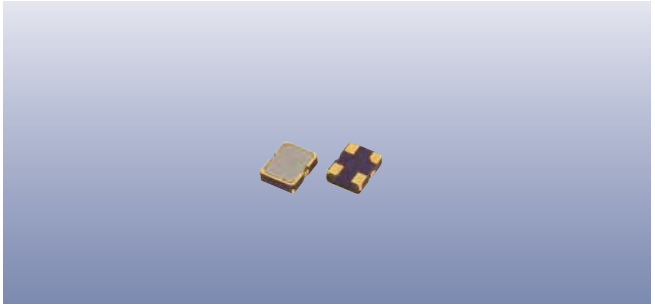

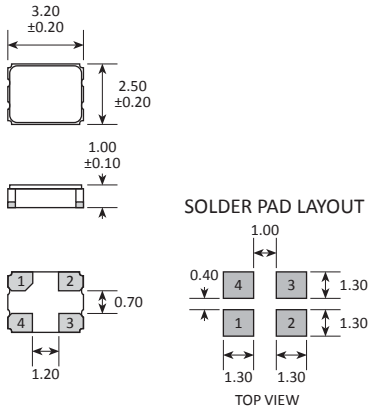

PAD	CONNECTION
1	Enable / disable
2	Ground
3	Output
4	Supply

Features

- Enable / disable tristate function
- Miniature ceramic package with metal lid
- Competitive pricing

Enable / Disable Function

Input (pad 1)	Output (pad 3)
Open	Enabled
'1' level	Enabled
'0' level	High Impedance

Note: '0' level = $V_{IL} \leq 30\%V_{DD}$, '1' level = $V_{IH} \geq 70\%V_{DD}$

Specifications

GXO-U119G: 1.8V supply

GXO-U119J: 2.5V supply

GXO-U119L: 3.3V supply

Parameters		Variant G	Variant J	Variant L	Option Codes
Frequency range:	1.80 ~ 133MHz	■			
	1.80 ~ 170MHz		■	■	
Frequency stability*:	±100ppm	■	■	■	
	±50ppm	□	□	□	B
	±25ppm	□	□	□	A
Operating temperature range:					
	-10 to +70°C	■	■	■	
	-40 to +85°C	□	□	□	I
Storage temperature range:					
	-55 to +125°C	■	■	■	
Supply voltage (V_{DD}):					
	+1.8V (±5%)	■			
	+2.5V (±5%)		■		
	+3.3V (±10%)			■	
Supply current (mA max):					
	1.8 ~ 50.0MHz	7	12	20	
	50.0 ~ 133MHz	20	30	40	
	133 ~ 170MHz	-	30	40	
Logic levels:					
	'0' level = $20\%V_{DD}$ max	■			
	'1' level = $80\%V_{DD}$ min	■			
	'0' level = $10\%V_{DD}$ max		■	■	
	'1' level = $90\%V_{DD}$ min		■	■	
Start up time:	10ms max	■			
	5ms max		■	■	
Waveform symmetry:					
	40:60 max @ $50\%V_{DD}$	■			
	45:55 max @ $50\%V_{DD}$		■	■	
Driving ability:	15pF CMOS	■	■	■	
Rise / fall time:	6ns max		■	■	
	5ns max (1.8~32.1MHz)	■			
	3.5ns max (32.1~133MHz)	■			
Enable / disable function:					
	Tristate (control via pad 1)	■	■	■	
Stand-by current:	10µA max	■	■	■	

■ Standard. □ Optional - Please specify required code(s) when ordering

* Frequency stability is inclusive of calibration @ 25°C, operating temperature range, supply voltage change, load change, shock and vibration.

Ordering Information

Product name + variant + option codes (if any) + frequency

eg: **GXO-U119L/A 40.0MHz** 3.3V, 25ppm, -20+70°C

GXO-U119G/BI 24.5760MHz 1.8V, ±50ppm, -40+85°C

Option code X (eg GXO-U119L/X) denotes a custom spec.

CEO B2B晶振平台-全球最专业的晶振在线采购查询平台http://www.crystal95.com

Product Information

GXO-U119

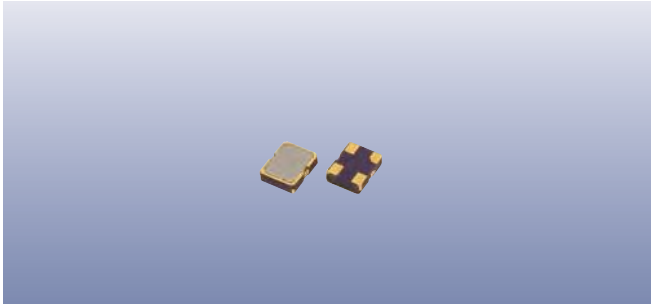

Construction

- Ceramic body with gold-plated pads
- Metal lid, seam sealed

Composition

This product is lead-free, and is fully compliant with the RoHS 2 directive 2011/65/EU

Packaging & Handling

Production quantities supplied on T&R, 2k pcs per reel.
Small quantities may be supplied on tape (no reel), or in bulk.

- Static sensitive product. Observe proper handling precautions

Marking

FREQUENCY
DC

Marking type: Laser
DC = Date code in YM, eg "CE" = May 2013

	A	B	C	D	E	F	G	H	J	K	L	M
Y	1	2	3	4	5	6	7	8	9	0		
M	Jan	Feb	Mar	Apr	May	Jun	Jul	Aug	Sep	Oct	Nov	Dec

Tape & Reel Specification

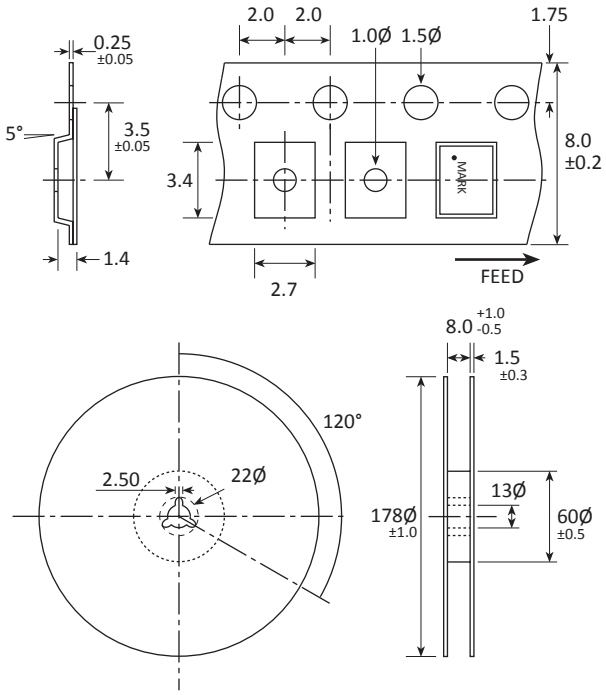

Not to scale. Dimensions in mm. Tolerances ±0.1mm unless otherwise stated.

Soldering Profile

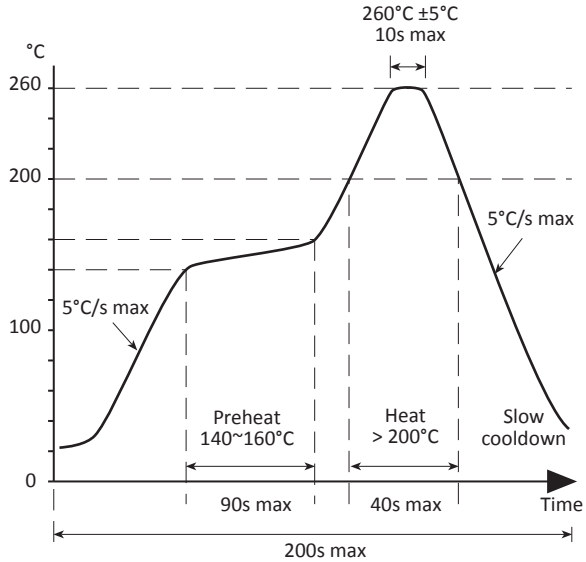

Solder resistance: 260°C x 10 secs x 2.

CEOB2B晶振平台-全球最专业的晶振在线采购查询平台http://www.crystal95.com