XMP-12100

2 x 1.6 mm ultra thin ceramic SMD Package

Specification :	
Frequency range :	16 MHz to 50 MHz
Standard Frequency:	26, 30, 32 MHz
Temperature range options:	**1:** -10 to +60 ℃ **2:** -20 to +70 ℃ **3:** -30 to +85 ℃ **4:** -40 to +85 ℃
Frequency stability vs. temperature options :	**1:** ± 5 ppm (Note 1) **2:** ± 10 ppm (available for temp.range 1 & 2): **3:** ± 15 ppm **4:** ± 25 ppm
Adjustment tolerance at +25 ℃:	± 50 ppm
Load capacity CL :	≥8 pf ≤ 16 pf
Insulation Resistance :	≥ 500 MOhms
Equivalent Series Resistance R1 max:	≤ 30MHz < 100 Ohm Mode A1 ≥ 30MHz < 80 Ohm Mode A1
Co :	3 pF max
Drive level :	10 µW standard
Aging :	< ±3.0 ppm/year
Storage temperature range :	-55 ℃ to + 125 ℃

(Note 1): ± 5 ppm case by case please contact factory for details;

Ordering Information :

XMP — 1 2 1 3 2 — A 1 — 12 pF — 20 MHz

Product Family

Package
1 = 2.05 x 1.65 mm

Temp. Range

Freq. stab. vs. temp.

Fundamental Mode

Load Capacity
S = Series Resonance

Frequency

Typical Part Number: **XMP-12132-A1-12pF-20 MHz**

Mode = A1
Temp. range = -40 to +85 ℃
Freq.stab. = ± 10 ppm
C_L = 12 pF
Frequency = 20 MHz

ED	Description	Date	Name
4			
3	Restrictions for stability options added	01.10.2013	Dannenmaier
2	Temperaturrange -40C+85C	05.03.2013	Dannenmaier
1		14.02.2013	Dannenmaier

KVG Quartz Crystal Technology GmbH
Waibstadter Str. 2 - 4
D-74924 Neckarbischofsheim
Tel. +49 (0) 7263 / 648-0
Fax. +49 (0) 7263 / 6196

CEO B2B晶振平台-全球最专业的晶振在线采购查询平台http://www.crystal95.com

XMP-12100

2 x 1.6 mm ultra thin ceramic SMD Package

Pb

Package Drawing:

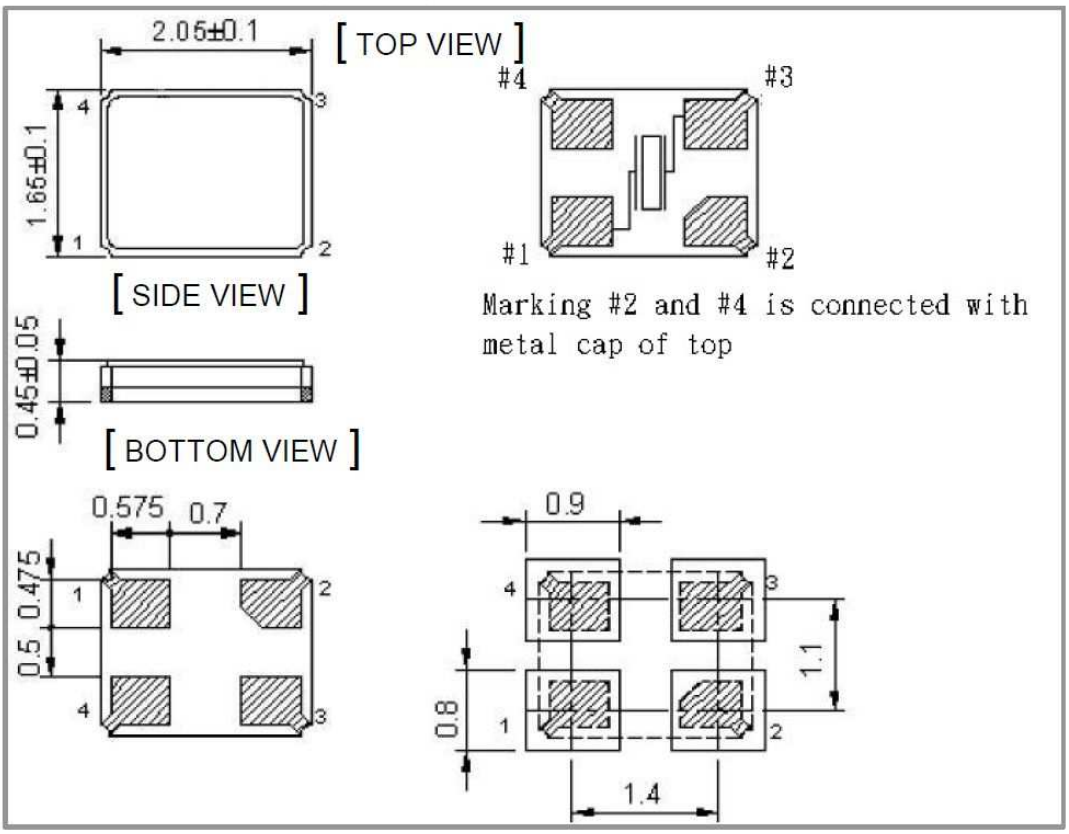

Layout solder pad (mm):

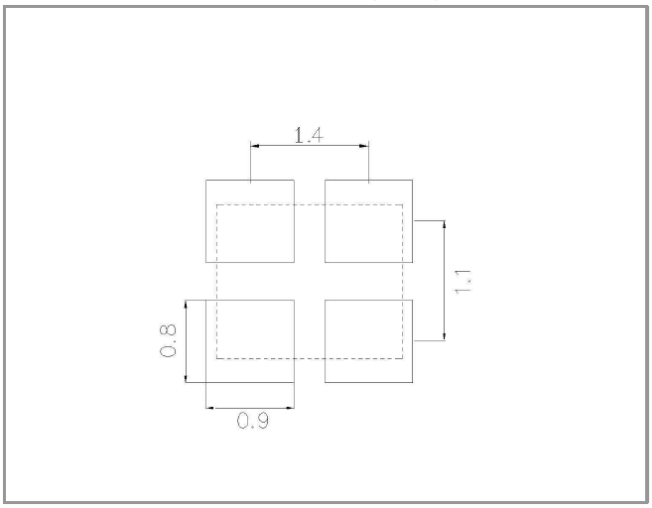

4				**KVG Quartz Crystal Technology GmbH**
3	Restrictions for stability options added	01.10.2013	Dannenmaier	Waibstadter Str. 2 - 4
2	Temperaturrange -40C+85C	05.03.2013	Dannenmaier	D-74924 Neckarbischofsheim
1		14.02.2013	Dannenmaier	Tel. +49 (0) 7263 / 648-0
ED	Description	Date	Name	Fax. +49 (0) 7263 / 6196

CEO B2B晶振平台-全球最专业的晶振在线采购查询平台http://www.crystal95.com