2 Lead Metal Package Quartz Crystal, 3 mm x 10 mm

39 Series

Product Features:

Low Cost
Small Footprint Package
Compatible with Leadfree Processing

Applications:

Fibre Channel
Server & Storage
Sonet /SDH
802.11 / Wifi
T1/E1, T3/E3
System Clock

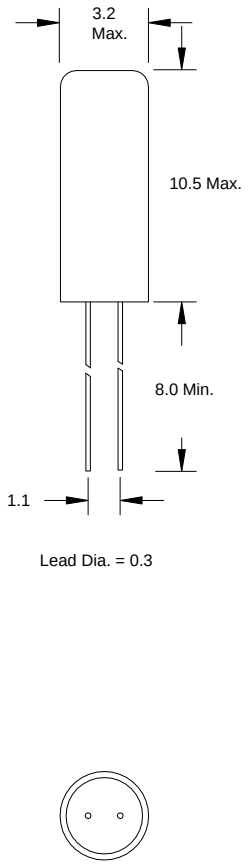

Dimension Units: mm

Frequency	3 MHz to 100.000 MHz
ESR (Equivalent Series Resistance)	
3.0 MHz – 3.4 MHz	200 Ω Max.
3.5 MHz – 3.9 MHz	200 Ω Max.
4.0 MHz – 4.9 MHz	200 Ω Max.
5.0 MHz – 5.9 MHz	150 Ω Max.
6.0 MHz – 6.9 MHz	120 Ω Max.
7.0 MHz – 8.9 MHz	120 Ω Max.
9.0 MHz – 12.9 MHz	80 Ω Max.
13.0 MHz – 19.9 MHz	60 Ω Max.
20.0 MHz – 29.9 MHz	45 Ω Max.
30 MHz – 36 MHz	40 Ω Max.
30 MHz – 100 MHz (3rd O.T.)	100 Ω Max.
Shunt Capacitance (C0)	7 pF Max.
Frequency Tolerance @ 25° C	±30 ppm Standard (see Part Number Guide for more options)
Frequency Stability over Temperature	±50 ppm Standard (see Part Number Guide for more options)
Crystal Cut	AT Cut Standard
Load Capacitance	18 pF Standard
Drive Level	1 mW Max.
Aging	±5 ppm Max. / Year Standard
Temperature	
Operating	0° C to +70° C Standard (see Part Number Guide for more options)
Storage	-40° C to +85° C Standard

Part Number Guide **Sample Part Number: 39 - FB1F18 - 20.000**

Package	Tolerance (ppm) at Room Temperature	Stability (ppm) over Operating Temperature	Operating Temperature Range	Mode (overtone)	Load Capacitance (pF)	Frequency
39 -	B = ±50 ppm	B = ±50 ppm	0 = 0°C to +50°C	F = Fundamental	18 pF Standard Or Specify	- 20.000 MHz
	F = ±30 ppm	F = ±30 ppm	1 = 0°C to +70°C	3 = 3rd overtone		
	G = ±25 ppm	G = ±25 ppm	2 = -10°C to +60°C			
	H = ±20 ppm	H = ±20 ppm	3 = -20°C to +70°C			
	I = ±15 ppm	I = ±15 ppm**	5 = -40°C to +85°C			
	J = ±10 ppm*	J = ±10 ppm**	9 = -10°C to +50°C			

* Not available at all frequencies. ** Not available for all temperature ranges.

CEO B2B晶振平台-全球最专业的晶振在线采购查询平台http://www.crystal95.com

2 Lead Metal Package Quartz Crystal, 3 mm x 10 mm

39 Series

Pb Free Solder Reflow Profile:

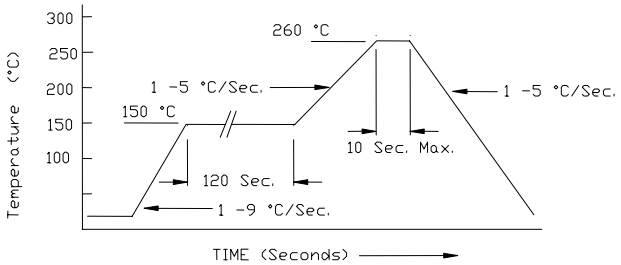

*Units are backward compatible with 240C reflow processes

Typical Circuit:

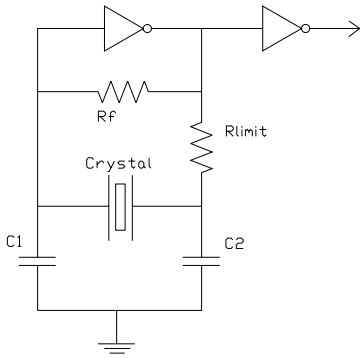

Package Information:

MSL = 1
Termination = e1 (Sn / Cu / Ag over Ni over Kovar base metal).

Environmental Specifications

Thermal Shock	MIL-STD-883, Method 1011, Condition A
Moisture Resistance	MIL-STD-883, Method 1004
Mechanical Shock	MIL-STD-883, Method 2002, Condition B
Mechanical Vibration	MIL-STD-883, Method 2007, Condition A
Resistance to Soldering Heat	J-STD-020C, Table 5-2 Pb-free devices (except 2 cycles max)
Hazardous Substance	Pb-Free / RoHS / Green Compliant
Solderability	JESD22-B102-D Method 2 (Preconditioning E)
Terminal Strength	MIL-STD-883, Method 2004, Test Condition D
Gross Leak	MIL-STD-883, Method 1014, Condition C
Fine Leak	MIL-STD-883, Method 1014, Condition A2, R1=2x10-8 atm cc/s
Solvent Resistance	MIL-STD-202, Method 215

Marking

Line 1: Frequency

CEOB2B晶振平台-全球最专业的晶振在线采购查询平台http://www.crystal95.com