OUTLINE DRAWINGS

FIG. A

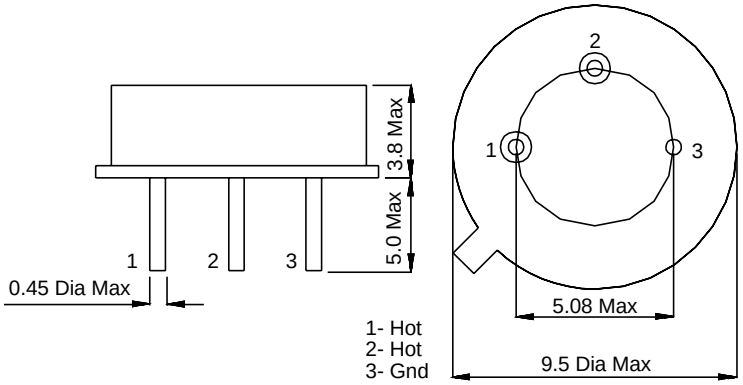

PACKAGE K

FIG. B

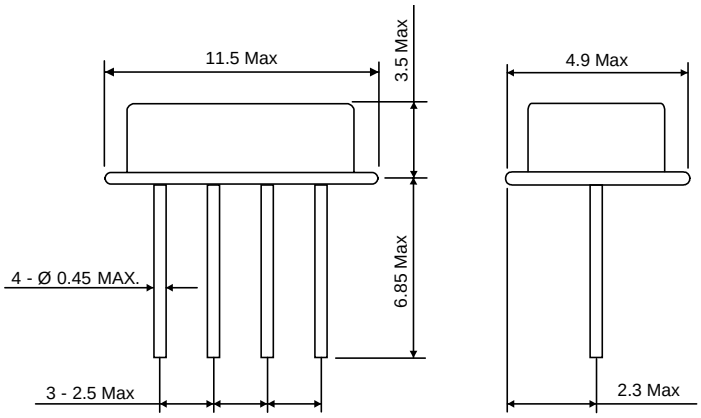

PACKAGE D

PART NUMBERING SYSTEM

SERIES	-	FREQUENCY	-	TOLERANCE	-	PACKAGE(x)
RSR		in MHz		in KHz		see below

Example: RSR-433.92-250-K
Raltron Saw Resonator, 433.92 MHz, ± 250 KHz, PACKAGE K (FIG. A)

PACKAGE DESIGNATIONS	
K	FIG. A
D	FIG. B
S	FIG. C
B	FIG. D

FIG. C

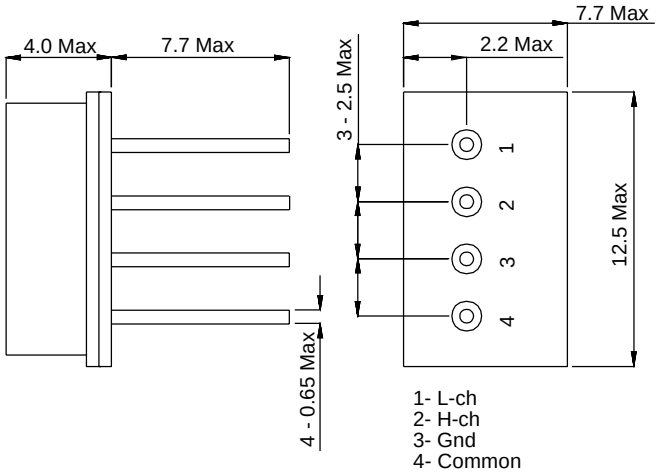

PACKAGE S

FIG. D

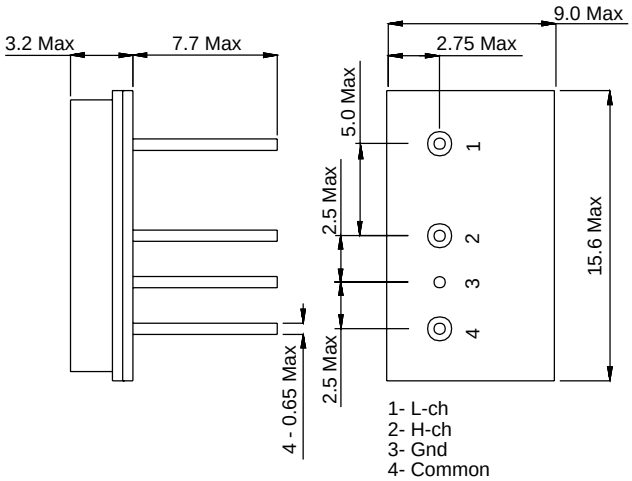

PACKAGE B

CEOB2B晶振平台-全球最专业的晶振在线采购查询平台http://www.crystal95.com